SERVICE ENTRANCE - UNDERGROUND
100 or 200 AMPS
Single Phase, 3 Wire, 120/240 Volt
Self Supported - Meter Pedestal

USE:
1. Installation in a mobile home park on a single or multiple meter project requiring not more than four meters.
2. A single meter pedestal may also be used for installations where there will be no permanent building or other structure to which the meter box may be mounted.

Note: A Company approved self-supported meter structure can be used as an alternative. Refer to ER 19-265.

PREVIOUS REVISION	ORIGINATED	PREVIOUS NUMBER
10-01-09	07-98	ER 19-275-F, (04-01-98)

LATEST REVISION: Updated meter socket identification, added references, removed Square "D" from Specification 3 (no longer made), and general revisions.

REFERENCE: Indiana Electrical Code / National Electrical Code (IEC / NEC), latest revision
Underwriters Laboratories (UL), latest revision
ER 5-500

SPECIFICATION:

1. INSTALLATION AND MAINTENANCE:

1.1 The pedestal shall be level and securely mounted on a concrete pad or to a post type mounting structure satisfactory to the Company. Mounting post, on post mounted pedestals, shall have a minimum of 4 feet underground (See Figure 1). Where a portion of the pedestal channel is used as the mounting post, the channel shall have a stabilizer at the bottom and be buried a minimum of 2 feet below final grade level (See Figure 2 and Figure 3).

1.2 All equipment and wiring for the service entrance shall be owned, installed, and maintained by the customer. The installation is to conform with the IEC / NEC, as well as the rules and requirements of any recognized legal inspection service in effect in the community, and satisfactory to the Company.

1.3 The meter installation shall be adequately grounded in accordance with the IEC / NEC.

1.4 The customer shall provide meter identification satisfactory to the Company so that the location of each meter and it's respective main disconnect(s), with respect to the location being serviced is easily determined. For installations involving multiple meters, the meter socket and it's respective main disconnect shall be labeled per Standard ER 5-500.

SERVICE ENTRANCE - UNDERGROUND
100 or 200 AMPS
Single Phase, 3 Wire, 120/240 Volt
Self Supported - Meter Pedestal

2. GENERAL:

2.1 The pedestal shall be constructed of No. 14 gauge steel and shall be protected against corrosion by one of the methods listed in UL-50, latest revision.

2.2 All terminals shall be of a type to accommodate copper or aluminum wire.

2.3 Each multiple, meter position shall be rated at least 100 amperes, and have a minimum distance of 8-1/2 inches, center to center. Single meter pedestal shall be rated 200 amperes.

2.4 Meter Position heights as measured from the top of the meter to the final grade level shall be as follows:

	Min.	Max.
Post Type Meter Pedestal	60"	60"
Single Meter Pedestal	36"	60"
Multi-Meter Pedestal	36"	76"

2.5 Insulation barriers shall be provided at the socket for all enclosed ring style meter installations.

2.6 Line side connectors for single meter installation shall be a minimum of #4/0.

2.7 Line side connectors for a multiple meter installation shall be a minimum of 350 KCM and connected at the midpoint of the pedestal bus.

SERVICE ENTRANCE - UNDERGROUND
100 or 200 AMPS
Single Phase, 3 Wire, 120/240 Volt
Self Supported - Meter Pedestal

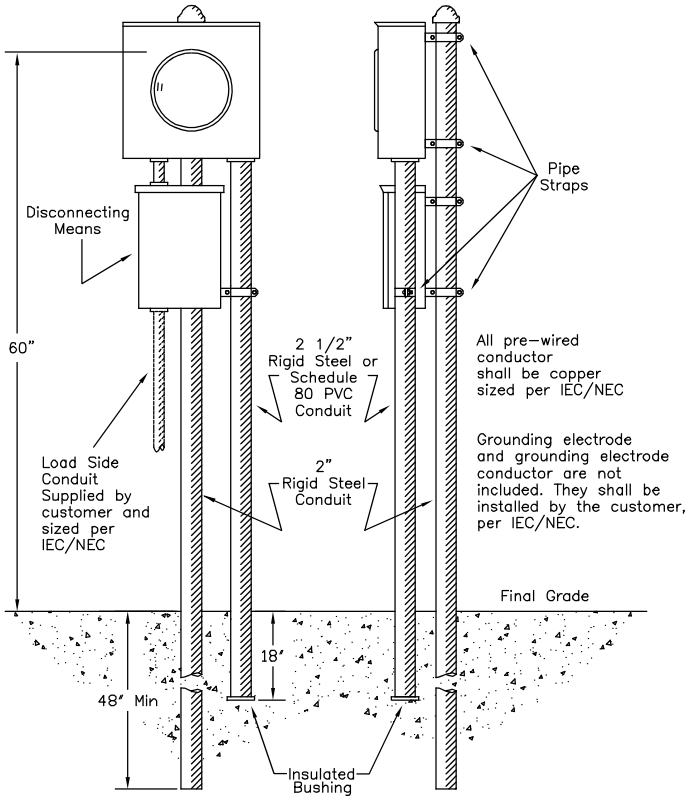

Figure 1 - Typical Post Type Installation

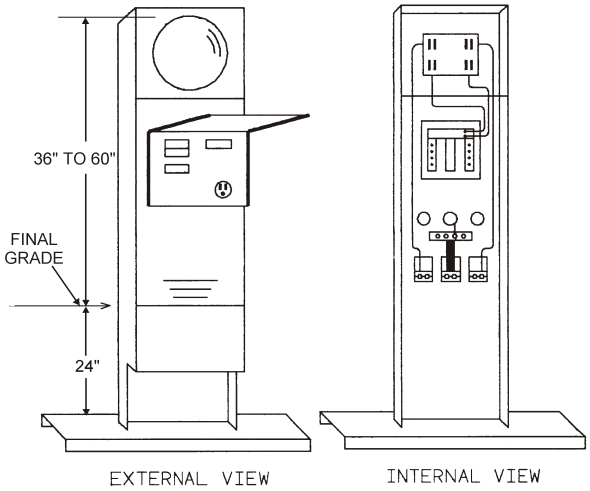

Figure 2
Typical Stabilizing Foot Installation
Single Meter Pedestal Position

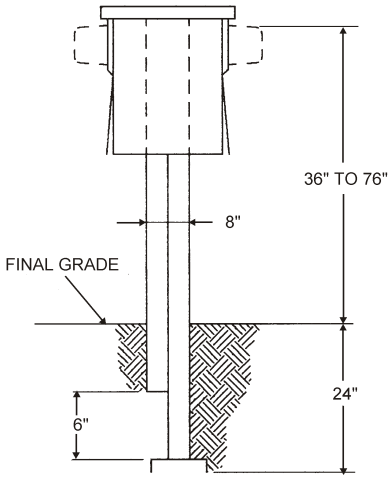

Figure 3
Typical Stabilizing Foot Installation
Multiple Meter Pedestal Position

SERVICE ENTRANCE - UNDERGROUND
100 or 200 AMPS
Single Phase, 3 Wire, 120/240 Volt
Self Supported - Meter Pedestal

3. APPROVED MANUFACTURERS, SINGLE METER PEDESTAL:

Approved Manufacturers	Catalog Number or Type	Amps	Mtg. Type (Note 1)
Cutler Hammer	MHR100P	100	S
	MHR200P	200	
Myers Electric Products	MES-M200	200	SF
Midwest	R101CP6HP	100	S
	R281C1P6H	200	
Milbank	U5136-O-100-S with K5415	100	SF
	U5136-0-200-S with K5415	200	
B&B Electrical Manufacturing (See Figure 1)	C/NIPSCO	100	P
	C/NIPSCO-200	200	

4. APPROVED MANUFACTURERS, MULTI-METER PEDESTAL:

Approved Manufacturers	Catalog Number or Type	No. Units	Amps	Mtg. Type (Note 1)
Cutler Hammer	MHR100B	2	100	S
	MHR200B	2	200	
Milbank	U5137-0-100-S with K5415	2	100	SF
	U5137-0-200-S with K5415	2	200	
Midwest	R101CB6HP	2	100	S
	R281C1B6H	2	200	

NOTES:

1. Mounting Method:
   P = Post
   S = Stake or Pad
   SF = Stabilizing Foot
   (It is necessary to specify the mounting method when ordering.)