SERVICE ENTRANCE - UNDERGROUND

Single & Three Phase
200, & 320/400 Amp

07-01-11
ER 19-270-M

USE: Arrangement of service equipment to supply electric energy to an underground, outdoor self contained meter installation.

PREVIOUS REVISION	ORIGINATED	PREVIOUS NUMBER
01-01-11	03-94	ER 1-220-B, 07-12-93 ER 19-750, 03-21-94 ER 19-755, 03-21-94

LATEST REVISION: Added Milbank Universal All-In-One Meter Main Sockets.

REFERENCE: Indiana Electrical Code / National Electrical Code (IEC/NEC), latest revision
ER 5-500, 5-550, 7-500, 13-230, latest revision
UL 414, latest revision
ANSI C12.7, latest revision

SPECIFICATION:

TYPICAL UNDERGROUND INSTALLATION

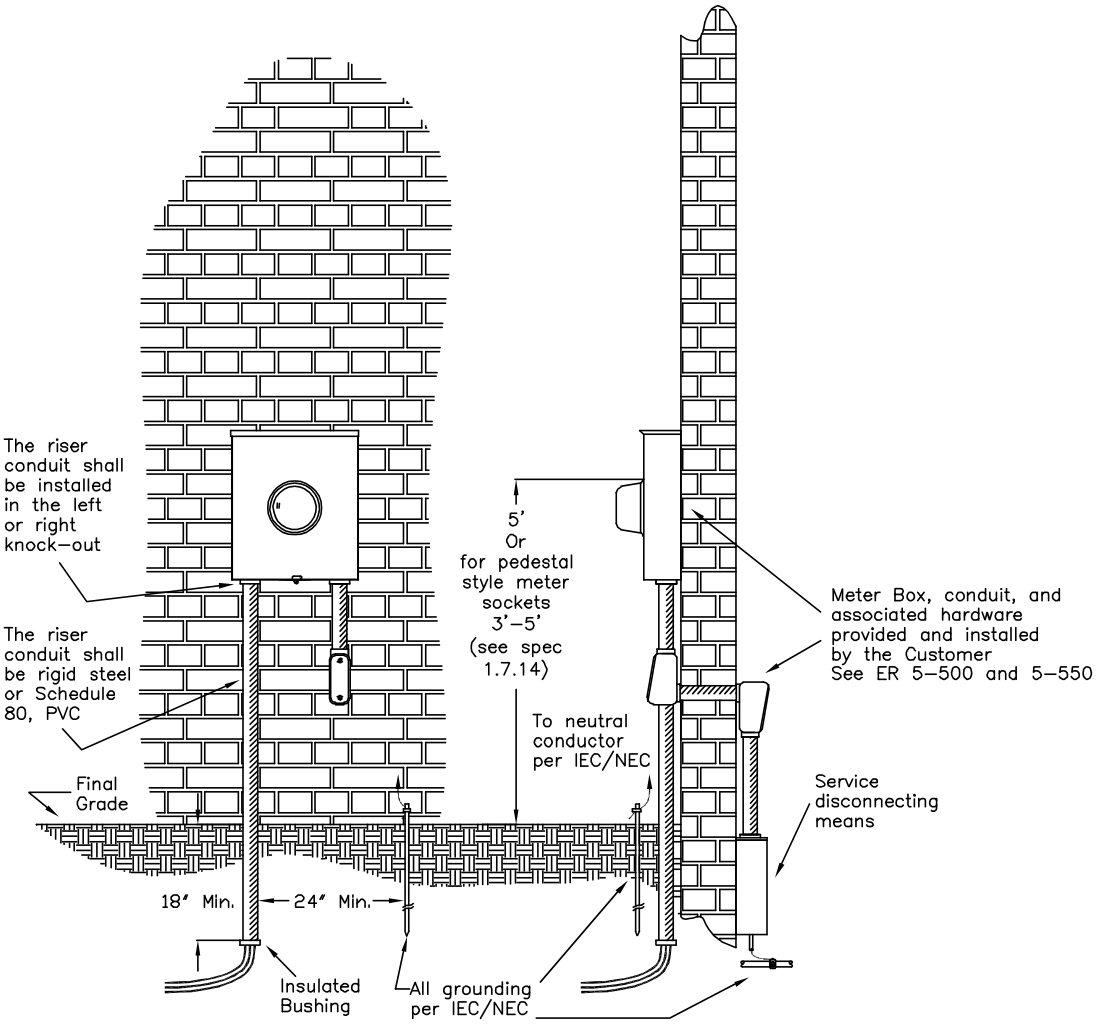

SERVICE ENTRANCE - UNDERGROUND

Single & Three Phase
200, & 320/400 Amp

1. GENERAL:

1.1 The riser conduit shall be installed in the left-most or right-most, bottom knockout of the meter box.

1.2 The service disconnecting means shall be installed at a readily accessible location nearest the point of entrance of the service entrance conductors.

1.3 Bonding bushings and jumpers shall be used around concentric knockouts that are formed so as to impair the electrical connection to ground for service equipment enclosures.

1.4 For grounding, refer to ER 7-500.
1.4.1 Ground rods and ground wires shall be installed a minimum of 24" away from the riser pipe to permit the installation and maintenance of service cables.

1.5 For larger service sizes or long service runs, customer shall check with Local Operating office, for required riser conduit size, and meter box needs. For conduit lengths in excess of 10' long, or in the case of conduit systems (any including elbows and/or couplings), refer to EU 2-160, for cable pulling requirements and conduit sizes.

1.6 Conduit & Conductor Recommendations:

Service Size	Service Entrance				
	Conduit (per IEC/NEC)		Service Entrance Conductors (See Notes below)		Grounding (Cu Only)
	Service Riser	Entrance Run	Residential 1ϕ 3W 120/240V	All Other Services	
100 Amps	2 Inch **(See 1.5)**	1 ½ or 2 Inch	#4 Cu	#3 Cu	#8
			#2 Al	#1 Al	
200 Amps	2-½ Inch **(See 1.5)**	2 Inch	2/0 Cu	3/0 Cu	#4
		2 ½ Inch	4/0 Al	250 KCM Al	
320/400 Amps	3 Inch **(See 1.5)**	3 Inch	400 KCM Cu	500 KCM Cu	1/0
		3 ½ Inch	600 KCM Al	700 KCM Al	

Note: Approved service entrance cable, with weather-proof fittings, may be used between socket and the general service disconnect, where permitted by local authority.

All recommendations for conductor sizes assume a 75°C temperature rating. Larger conductor sizes may be necessary if lower temperature ratings exist. Refer to IEC/NEC 310-16 for proper conductor sizes, in this case.

The following are the recommended insulation types, based on 75°C minimum temperature rating: RH, RHH, RHW, THHW, THW, THWN, THHN, XHHW, USE.

1.7 All meter sockets shall meet the following specifications, unless otherwise stated below.

1.7.1 Meter sockets shall be designed for use with standard detachable type watthour meters.

1.7.2 Sockets shall meet the requirements in AEIC, EEI, NEMA Standards for watthour meter sockets.

1.7.3 Meter sockets shall have a swing style latch, which will accept padlock or wire style seal.

1.7.4 Meter sockets shall be made of aluminum alloy or galvanized steel.

1.7.5 Meter sockets shall be of the ringless type.

1.7.6 Meter sockets shall be UL listed.

1.7.7 Meter sockets shall be provided with concentric knockouts in the back, sides and bottom. Knockouts shall be sized to accommodate the conduit recommendations in Spec 1.7.

1.7.8 Meter sockets shall be provided with a by-pass of the manual, horn or lever type, so arranged that the meter socket cannot be sealed with the by-pass on.

1.7.9 Meter sockets shall be provided with a grounding connector for a #6 conductor.

1.7.10 Meter sockets shall be plainly marked with the manufacturer's name, catalog number and electrical ratings.

1.7.11 Meter sockets shall be rated at a minimum of 200 amps.

1.7.12 Meter sockets shall be a minimum of 11 inches wide.

Note: Larger sized boxes or side wire boxes will be needed for long service runs. **(See Spec 1.5)**

1.7.13 All sockets will have the following conductor terminations on the line side:

1.7.13.1 200 Amp - lugs to fit #2 through #4/0 (minimum) conductor

Note: Lugs to fit 350 KCM will be needed in boxes used for long service runs. **(See Spec 1.5)**

1.7.13.2 320 Amp - ⅜" Diameter studs

1.7.14 Pedestal style meter sockets are approved for use, where noted. They shall meet all above mentioned specifications (where applicable), unless otherwise stated below.

1.7.14.1 Pedestal style meter sockets shall be a minimum of 8" wide.

1.7.14.2 Pedestal style meter sockets shall be installed with a height of 3'-5' to the top of the meter.

1.7.14.3 Pedestal style meter sockets shall be installed so 18" of the enclosure is beneath grade.

SERVICE ENTRANCE - UNDERGROUND

Single & Three Phase
200, & 320/400 Amp

2. 4 JAW - 200 AMP:

2.1 Used for the following services:

2.1.1 120 volt, 1 phase, 2 wire

2.1.2 120/240 volt, 1 phase, 3 wire

2.2 Approved Sockets

2.2.1 Any socket, rated for 200 amps, which meets the specifications in 1.7 above, including pedestal style meter sockets (see spec 1.7.14).

2.2.2 Optional Milbank Universal All-In-One Meter Main which has a disconnect and breaker positions built in. See table below.

Milbank	Catalog Number
200 Amp	U5168-XTL-200-KK

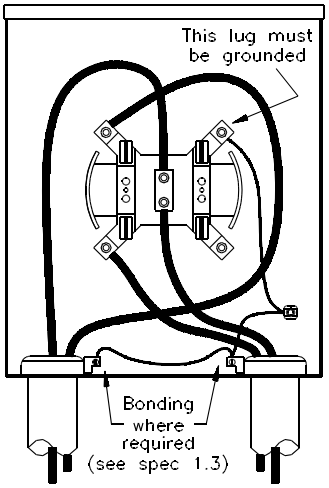

200a, 120v, 1ph, 2w

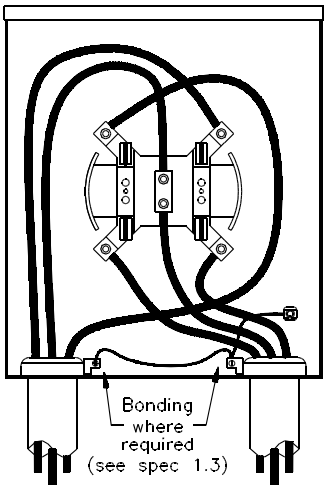

200a, 120/240v, 1ph, 3w

3. 4 JAW - 320/400 AMP

3.1 Used for the following services:

120/240 volt, 1 phase, 3 wire

3.2 Approved Sockets

3.2.1 Sockets shall meet all specifications in 1.7 above.

3.2.2 The right line side location of the 320 amp socket box shall be provided with a reduced jaw.

3.2.3 Meter sockets shall be supplied with a label designating "Use 320 Amp Meter Only".

3.2.4 Bypass shall be of the manual, jaw release, lever type.

3.2.5 Approved for use:

Manufacturer	Catalog Number
Landis & Gyr	48104-82WI Type HQ-4SWT
Milbank	U3000-X
	U1748–O (See Note 7.1)
	U4835-X-2/200-BL (See Note 7.2)
Durham	1008191... (See Note 7.3)

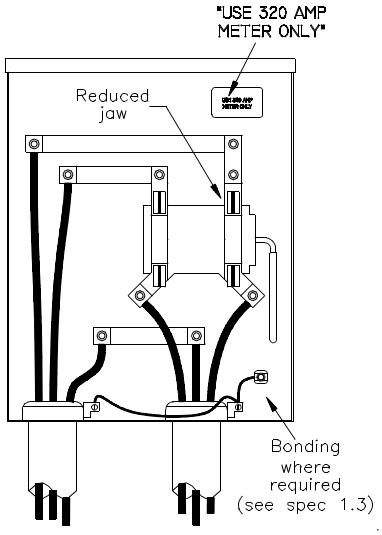

320/400a, 120/240v, 1ph, 3w

4. 5 JAW - 200 AMP:

4.1 Used for the following services:

4.1.1 240 volt, 3 phase, 3 wire (B phase grounded)

4.1.2 120/208 volt, 1 phase, 3 wire (contact Local Operating Office for information)

4.2 Approved Sockets

4.2.1 Sockets shall meet all specifications in 1.7 above.

4.2.2 Sockets shall be provided with a removable ground strap on the fifth jaw.

4.2.3 Bypass shall be of the manual, jaw release, lever type.

4.2.4 Approved for use:

Manufacturer	Catalog Number
Landis & Gyr	40405-02QG
Milbank	U9551-O
	U9108-O (See Note 7.1)
	U5168-XLT-200-KK-5T (See Note 7.4)
Durham	UT-H5213.. (See Note 7.3)

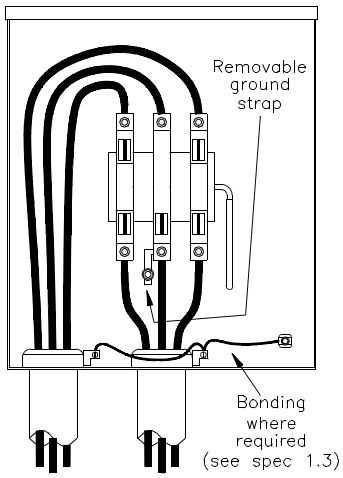

200a, 240v, 3ph, 3w

SERVICE ENTRANCE - UNDERGROUND

Single & Three Phase
200, & 320/400 Amp

5. 7 JAW - 200 AMP:

5.1 Used for the following services:
120/208 volt, 3 phase, 4 wire

5.2 Approved Sockets
- 5.2.1 Sockets shall meet all specifications in 1.7 above.
- 5.2.2 Sockets shall be provided with a strap to connect the neutral to the socket ground jaw.
- 5.2.3 Bypass shall be of the manual, jaw release, lever type.
- 5.2.4 Approved for use:

Manufacturer	Catalog Number
Landis & Gyr	40407-02QG
Milbank	U9701-O
	U9107-O (See Note 7.1)
Durham	UT-H7213... (See Note 7.3)

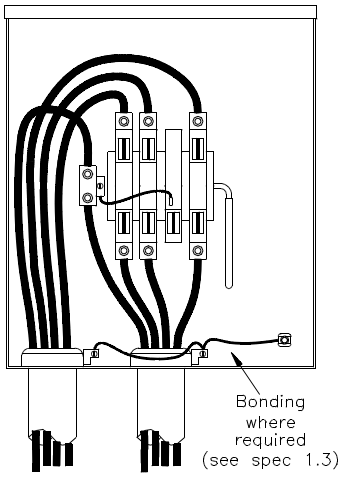

200a, 120/208v, 3ph, 4w

6. 7 JAW - 320/400 AMP:

6.1 Used for the following services:
120/208 volt, 3 phase, 4 wire

6.2 Approved Sockets
- 6.2.1 Sockets shall meet all specifications in 1.7 above.
- 6.2.2 The right line side location of the 320 amp socket box shall be provided with a reduced jaw.
- 6.2.3 Meter sockets shall be supplied with a label designating "Use 320 Amp Meter Only".
- 6.2.4 Bypass shall be of the manual, jaw release, lever type.
- 6.2.5 Approved for use:

Manufacturer	Catalog Number
Landis & Gyr	44707-02
Milbank	U2594-X-K7

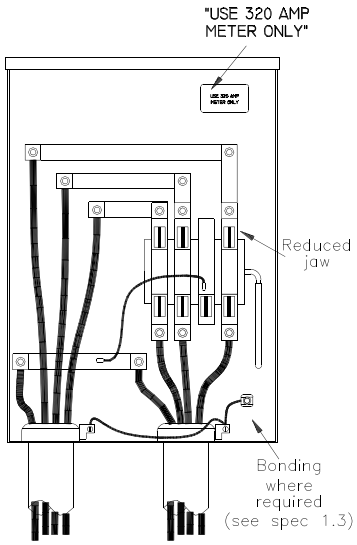

320/400a, 120/208v, 3ph, 4w

7. NOTES:

7.1 Pedestal style socket (See spec 1.7.14)

7.2 Optional socket for 120/240 volt, 1 phase, 3 wire, 320 Amp. Has 2-200 Amp main disconnects built in enclosure.

7.3 Provided with hub plate cover

7.4 Optional socket for 120/208 volt, 1 phase, 3 wire, 200 Amp. Has main disconnect and breaker positions built in enclosure.