# SERVICE - TEMPORARY

Single Phase, 120 or 120/240 Volts

100, 200, & 320 Amp



**USE:** During periods of construction or repair, a temporary meter installation may be made, provided such installation is approved by the Company (NIPSCO). No temporary installation may continue for more than twelve (12) months.

| PREVIOUS REVISION | ORIGINATED | PREVIOUS NUMBER |
|---|---|---|
| 03-16-94 | 03-94 | ER 1-320-A, (08-01-89) |

**LATEST REVISION:** Remove overhead/underground combination installation as an approved option. Change NEC code references to IEC/NEC. Otherwise, general revision.

**REFERENCE:** IEC/NEC (Indiana Electrical Code / National Electrical Code), latest revision.

**SPECIFICATION:**

**1. GENERAL:**

1.1 The meter shall be plumb, level, and securely mounted to a substantial building or pole. When the temporary service is mounted on a post, the support bracing shall be nailed or bolted to the post and staked in such a manner as to hold the post securely in a plumb position.

1.2 All wiring and equipment of the temporary service owned by the Customer shall be installed and maintained at the expense of the Customer and shall conform with rules and requirements of any recognized legal inspection service in the community, and to a standard satisfactory to the Company.

1.3 The meter installation shall be adequately grounded in accordance with the IEC/NEC (Indiana Electrical Code / National Electrical Code), latest revision.

**2. UNDERGROUND SERVICE:**

2.1 The Company will supply an underground service of not more than five (5) feet in length from a pedestal on its underground distribution line or twenty (20) feet in length from a pad mounted transformer to the temporary service provided by the Customer.

2.2 The underground service, provided by the Company, will be direct burial.

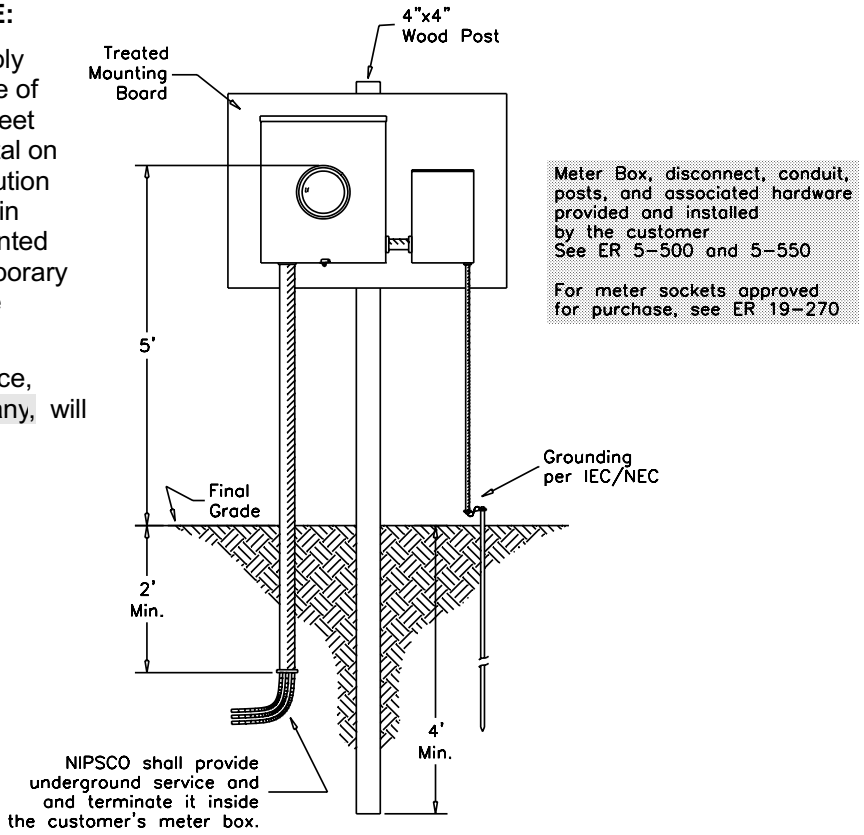

# SERVICE - TEMPORARY

Single Phase, 120 or 120/240 Volts
100, 200, & 320 Amp

**3. OVERHEAD SERVICE:**
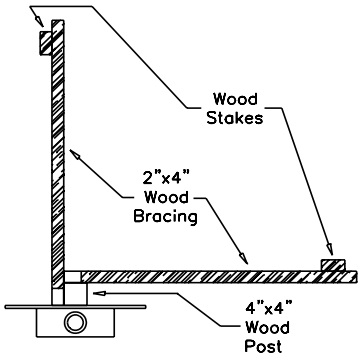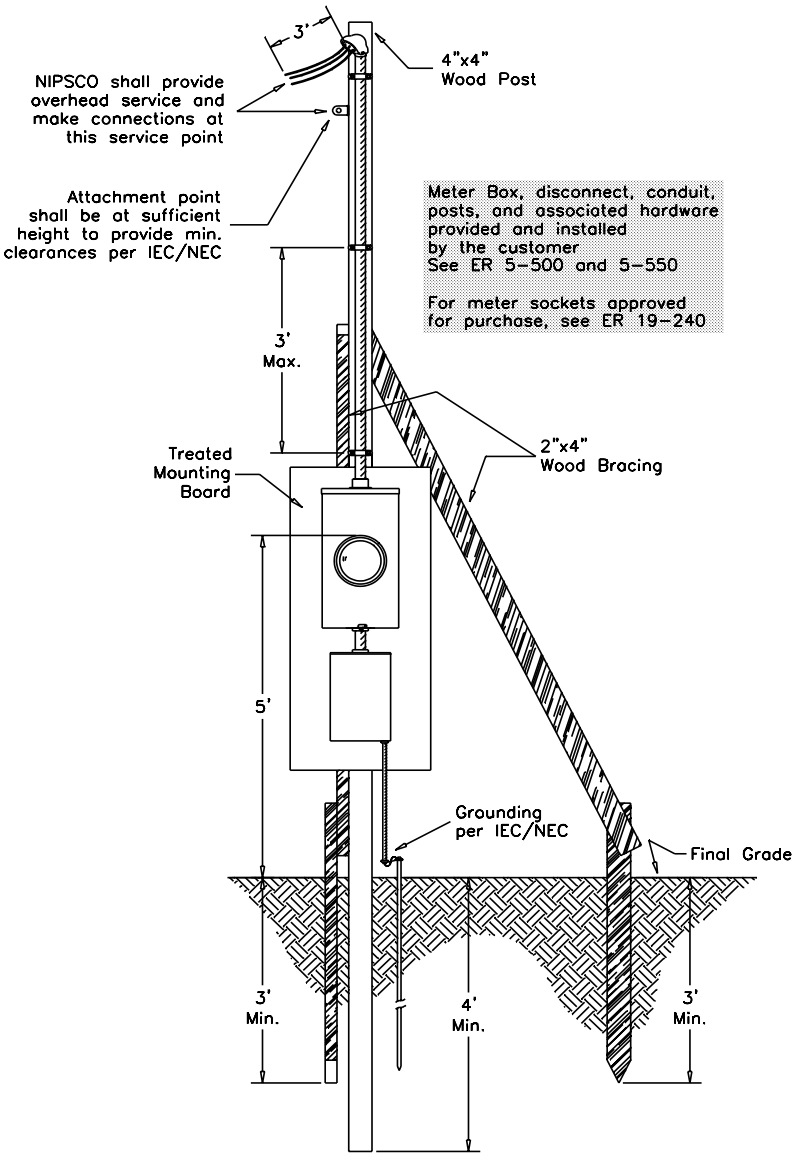
3.1 The Company will supply an overhead temporary service. Depending on service length and size, additional guying and/or support structures may be needed. These shall be supplied and installed by the customer.