DISTRIBUTED RESOURCE GENERATION

Net Metered

USE: Requirements and guidelines for interconnection of customer owned, (DR) Distributed Resource generation source, to NIPSCO's electric system, configured for "Net Metering."

PREVIOUS REVISION	ORIGINATED	PREVIOUS NUMBER
09-01-11	04-05	

LATEST REVISION: Added extra reference, and requirements in General section; and, updated Figure 1 and added Figure 2.

REFERENCE: 170 IAC 4-4.2, IURC Rule for "Net Metering"
Rule 50 of Electric Tariff, "General Rules and Regulations Applicable to Electric Service"
IEEE 1547, latest revision
UL 1741, latest revision
NIPSCO Standards ER 13-210, ER 16-600, ER 19-240, ER 19-255 & ER 19-270
IEC/NEC (Indiana Electrical Code/National Electrical Code) latest revision
MISO Business Practice Manual Generator Interconnection BPM-015-R3, latest revision

SPECIFICATION:

1. ELIGIBILITY:

Any residential, commercial, or industrial customer in good standing may install, own, and operate a "Net Metered" generation source(s), interconnected to NIPSCO's electric system if the following are met (subject to current summer peak retail load limitation):

1.1 The generation source is of a solar, wind, biomass or new hydro type.

1.2 The total nameplate capacity of the generation source is 1 megawatt (MW) or less (if multiple units are installed, the aggregate total nameplate shall be 1 MW or less).

1.3 The generation source is located on the eligible customer's premises, is operated by said customer, and is interconnected through a single service point.

1.4 The generation source is used primarily to offset all or part of the eligible customer's own electric load.

1.5 The customer must submit the "Interconnection Application" to NIPSCO, with proof of insurance coverage to be considered for, and to obtain approval for Net Metering.

1.6 NIPSCO shall perform a feasibility review for the proposed generation source interconnection as an initial screening for the impact it may have to its electric system. The feasibility review will evaluate system readiness for the interconnection and will determine if there is a need for a more extensive study. If an Interconnection Evaluation Study needs to be performed by NIPSCO, any fees associated with this study will be the responsibility of the customer. Additionally if it is found that the proposed generation source requires system infrastructure upgrades to NIPSCO's electric system, the customer will be required to pay the total cost of the required system improvements.

1.7 Eligible customers shall enter into an "Interconnection Agreement" with NIPSCO and if any

DISTRIBUTED RESOURCE GENERATION
Net Metered

upgrades to NIPSCO's electric system are required, the customer must pay for these, in full, before the generation source is allowed to interconnect to NIPSCO's electric system.

1.8 Any customer that wishes to connect to our electric transmission system (69kV, 138kV, or 345kV) must follow all rules and regulations of MISO (**M**idwest **I**ndependent Transmission **S**ystem **O**perator) and abide to NIPSCO's rules and regulations for "Net Metered".

2. GENERAL:

2.1 All DR generation facility installations shall comply with all applicable codes and standards, including but not limited to those listed in the reference section of this standard.

2.2 If a customer-generator facility is to be connected to a single-phase shared secondary, the aggregate generation nameplate capacity connected to the shared secondary, including the proposed nameplate capacity, shall not exceed the lesser of twenty (20) kVA or the nameplate rating of the service transformer.

2.3 DR generation shall not adversely affect NIPSCO's electric system or any of its customers. Refer to standard ER 16-600 for power quality requirements.

2.4 It shall be the responsibility of the DR generation customer to protect their own equipment and facilities. This protection shall include protection against electrical system over voltages, line frequency disturbances, faults, lightning surges, and any other phenomenon resulting from the interconnection.

2.5 Generation source shall comply with UL 1741 (latest revision).

2.6 Interconnection will not be allowed to NIPSCO's electric system until the installation has been approved by an authorized municipal, county, or other governmental inspector where such inspection procedures are established; and, by a final inspection by a NIPSCO Field Engineer or Representative.

3. INSTALLATION AND OPERATION:

3.1 The eligible customer shall install, operate, and maintain the generation source in accordance with the manufacturer's suggested practices.

3.2 A lockable manual or power operable disconnect switch, or lockable circuit breaker shall be installed between the generation source, and NIPSCO's electric system, and be accessible to NIPSCO personnel at all times. This switch shall be labeled "Utility-Generator Disconnect Switch": (See Figure 1 & 2)

3.3 In all cases, a plaque shall be placed next to NIPSCO's electric meter providing the location of the utility-generator disconnect switch and the generation source. Furthermore, all buildings or structures with both a utility service and a generation source shall have a permanent plaque or directory providing the location of the utility-generator disconnect switch and the generation source.

3.4 NIPSCO may isolate the eligible customer's generation source at any time if it is believed that

continued operation of the generation source will create or contribute to a system emergency. A system emergency is defined as any condition on the electric system likely to result in any of the following:

3.4.1 A significant disruption of service to any NIPSCO customer.

3.4.2 A substantial deviation from NIPSCO's normal service standard.

3.4.3 An endangerment to life or property.

3.5 NIPSCO may perform on-site inspections to verify the proper installation and continued safe operation of the generation source, interconnection equipment, and net metering facilities. Inspections shall be done at reasonable times, and with reasonable advance notice to the eligible customer.

3.6 Figures 1 & 2 show typical residential solar and wind installations of 320 amps or less. Larger installations for solar and wind, as well as installations for biomass or new hydro are generally more complex and are not shown. These larger installations will require additional review from the appropriate NIPSCO Engineering department.

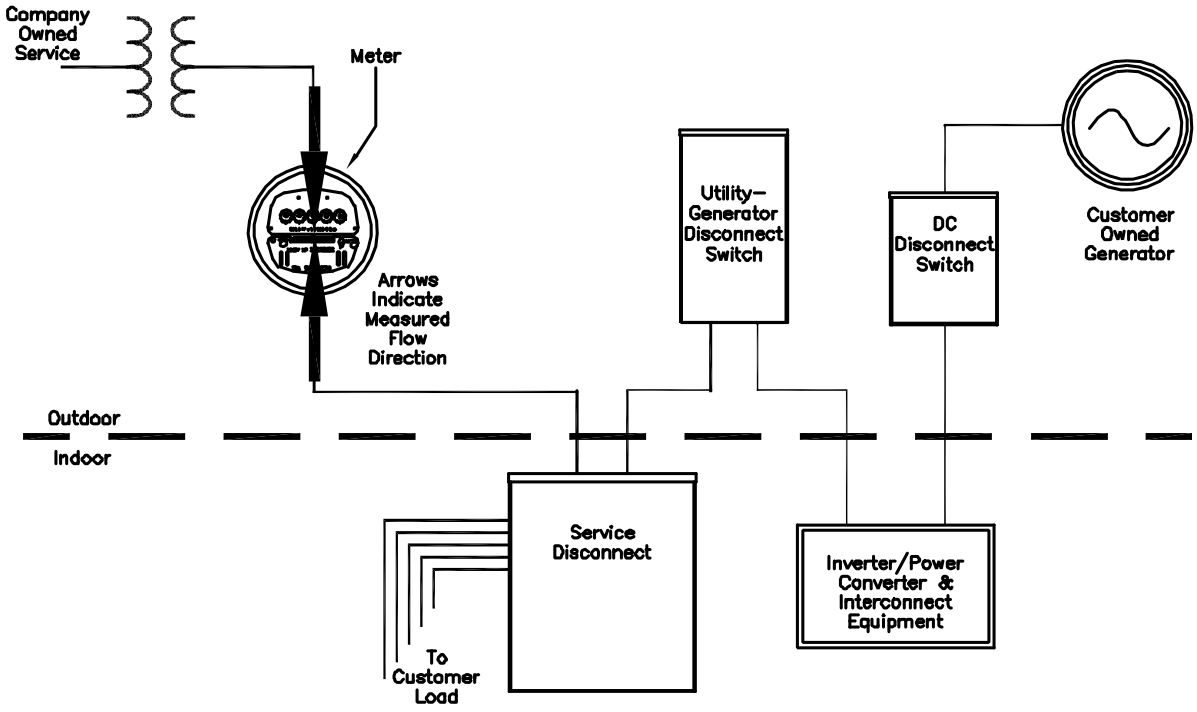

Figure 1 - Typical Residential Solar Installation

DISTRIBUTED RESOURCE GENERATION
Net Metered

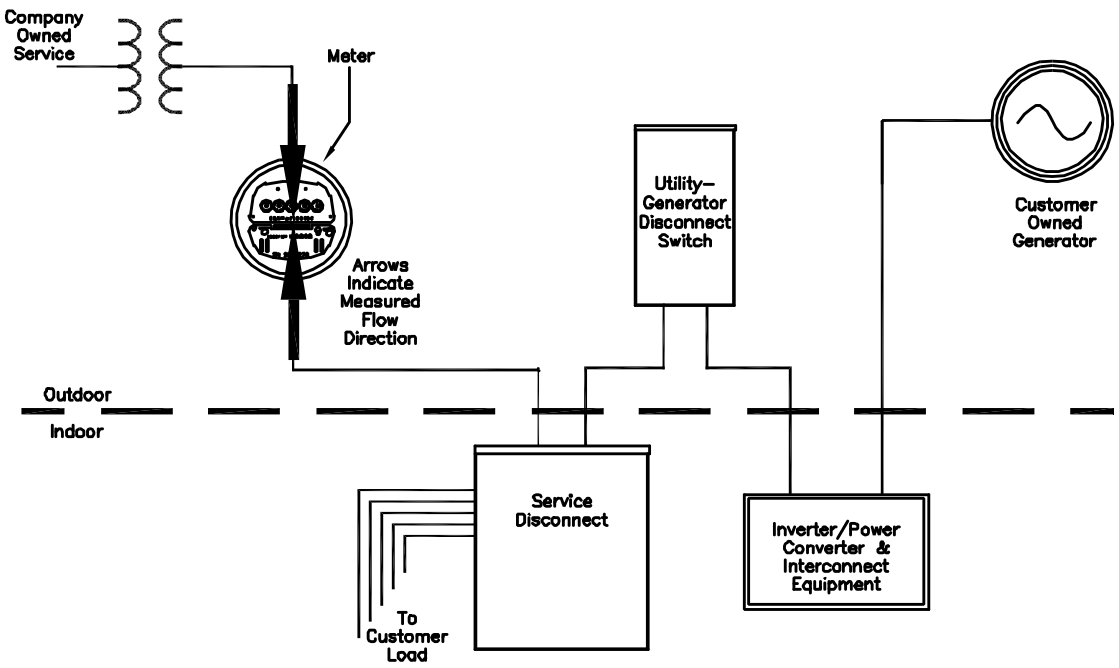

Figure 2 - Typical Residential Wind Installation

4. METERING:

4.1 Metering of the Net Metered generation source shall be through an appropriate watt-hour meter. The watt-hour meter shall measure kWh used by the eligible customer, and shall measure the excess kWh exported by the customer to NIPSCO's electric system. (See Figure 1 & 2)

4.2 NIPSCO will provide the watt-hour meter, and the eligible customer shall provide the meter socket (where required), as well as provide for the proper installation of all service entrance equipment required for a Net Metered interconnection. (NIPSCO Engineers will inform the customer if the customer is to provide the meter socket; or, if NIPSCO will provide the meter socket. The Engineer will also provide the customer any applicable NIPSCO Standards as needed.)